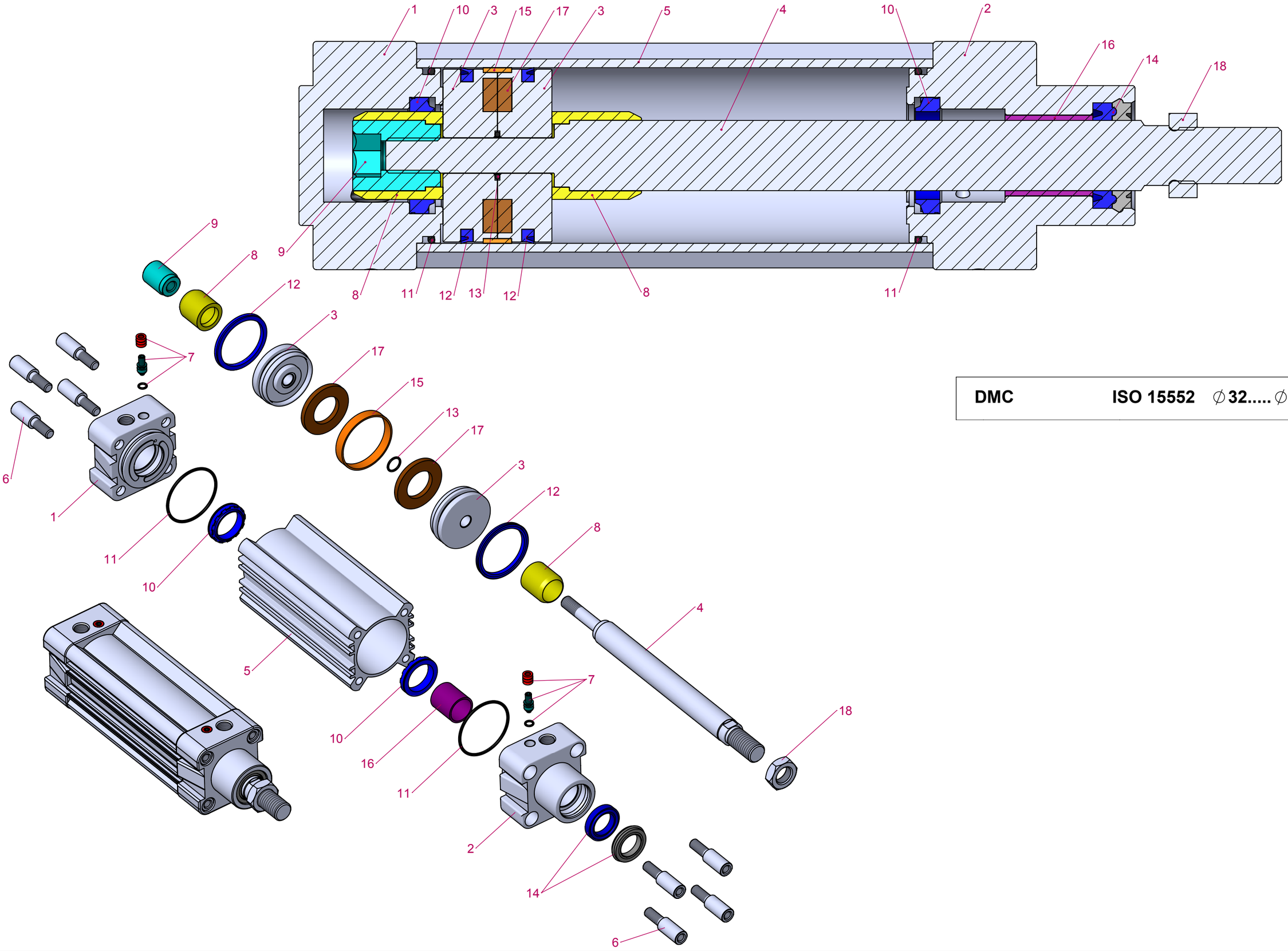

DMC **ISO 15552** **∅32.....∅100mm**