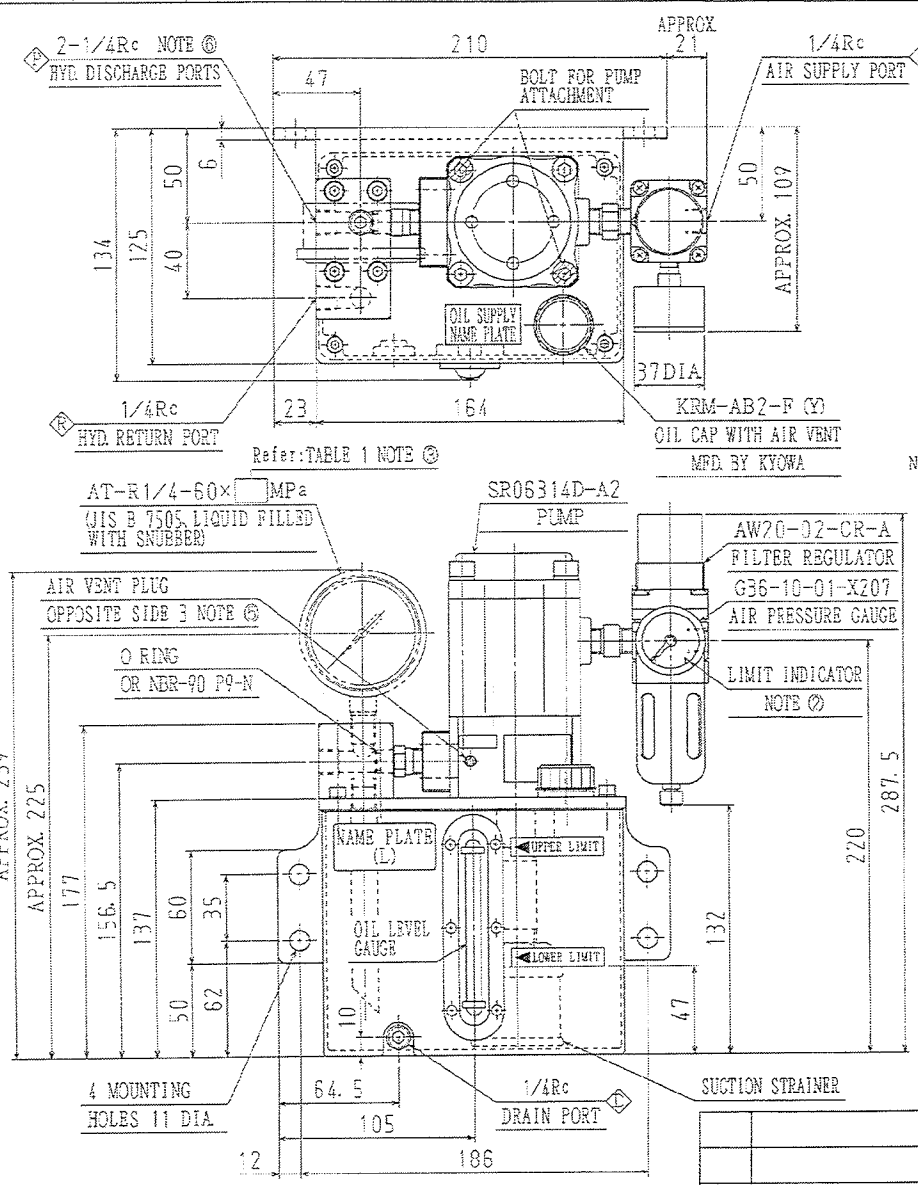

STANDARD

設計資料	――	普通許容差 (B)(C)(D)(E)		表面粗さ	
		寸法の区分	許容差	仕上記号	Rγ
検査規格	SRZS-3267	0.5以上6以下	±0.1	▽▽▽▽	0.8S以下
		6を越え30以下	±0.2	▽▽▽	6.3S 〃
取扱説明書	SRT-11740	30 〃 120 〃	±0.3	▽▽	25 S 〃
		120 〃 315 〃	±0.5	▽	100S 〃
サービスマニュアル	SRT-11743	315 〃 1000 〃	±0.8	～	規定なし
ノI0050	トI0000	1000 〃 2000 〃	±1.2		
		2000 〃 3150 〃	±2.2		

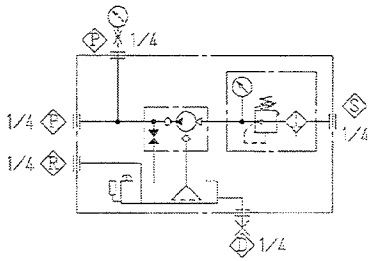

SCHEMATIC

NOTE ① Refer to a regulator setting pressure, and sets so that hydraulic pressure gauge becomes working pressure.

② Safety zone indicator is only the hydraulic pressure gauge. Air pressure gauge sets and ships a limit indicator to working pressure. (When there are no working pressure directions, it sets and ships to 0 MPa.)

③ Safety zone indicator on the hydraulic pressure gauge becomes a pressure range of table 1.

④ Colors of dial face are : white for specified range shown above, red for pressures outside this range, and green at the point of working pressure.

⑤ Do not loosen air vent plug more than two turns.

⑥ If hydraulic pressure gauge is equipped, only "P" port is provided for.

★ SPECIFICATIONS

- MAX. SUPPLY AIR PRESSURE : 1.0MPa
- PUMP SUPPLY AIR PRESSURE RANGE : 0.2~0.6MPa
- REGULATOR SETTING PRESSURE (PA) CALCULATION

$$P_A = \frac{P_H + 0.89}{18.7} \text{ (MPa)}$$

WORKING PRESSURE MPa (PH)	REGULATOR SETTING PRESSURE NOTE① MPa (PA)
※□	□

Please be sure to indicate the working pressure of ※ mark.

- AMBIENT TEMPERATURE : -5~60℃ (Except when drain is iced.)
- OPERATING FREQUENCY : Under 60/day (under 2 minutes/time) A pump is the time which is breathing out oil. (The time under pressure up stop is not included.) Please consult, when you exceed this.
- RECOMMENDED FLUID : GENERAL HYD. FLUID (ISO VG32~VG56)
- TANK VOLUME
  - RESERVOIR CAPACITY : 2.0ℓ
  - AVAILABLE OIL VOLUME : 0.9ℓ
- COLOR OF TANK : MUNSELL N-5.5
- MASS : ABOUT 6.7kg

★ ATTACHMENT

- HEX. SOCKET HEAD CAP SCREW : M10×20・・・4 PIECES
- SPRING WASHER : M10・・・・・・4 PIECES

TABLE1. HYDRAULIC PRESSURE GAUGE (OPTION) (UNIT:MPa)

ITEM	SYMBOL	PRESSURE GAUGE	WORKING PRESSURE	PRESSURE RANGE NOTE ③	SAFETY ZONE INDICATOR RANGE NOTE ④	REMARKS
01	NO SYMBOL	NO GAUGE	□	――	――	STANDARD
02	G	WITH GAUGE	□	0~25	――	NO SAFETY ZONE INDICATOR
03	S		※□	0~□	□~□	WITH SAFETY ZONE INDICATOR

MARK	REVISION	DATE	ENF MAR	APVD
a	ZH F&R[illegible]	2013 12/6	B	

3RD ANGLE P. RELATION NO.

MASS

MATERIAL	――	NAME	HMS06314-□-A2
SCALE	1:2.5		HYDRAULIC POWER UNIT ASS'Y
DATE	JUL.-7-2011	DWG. NO.	3SR-69513
APPROVAL	CHECKED	DRAWN	
Y. Iwasaki	Tom Kobayashi	K. Yoshizaki	BR ENGINEERING CO.,LTD.

Y03a